SERIES PW5420 NON-IMPACT RESISTANT, VINYL PICTURE WINDOW

FLORIDA PRODUCT APPROVAL #5012

DESIGN PRESSURE RATING
SEE TABLE 1

IMPACT RATING
NOT RATED FOR IMPACT RESISTANCE

1) THIS PRODUCT HAS BEEN DESIGNED & TESTED TO COMPLY WITH THE REQUIREMENTS OF THE CURRENT FLORIDA BUILDING CODE.

2) SHUTTERS ARE REQUIRED WHEN USED IN WIND-BORNE DEBRIS REGIONS.

3) MASONRY ANCHORS MAY BE USED INTO WOOD AS PER TABLES 2 & 3. ALL WOOD BUCKS LESS THAN 1-1/2" THICK ARE TO BE CONSIDERED 1X INSTALLATIONS. 1X WOOD BUCKS ARE OPTIONAL IF UNIT IS INSTALLED DIRECTLY TO SUBSTRATE. WOOD BUCKS DEPICTED AS 2X ARE 1-1/2" THICK OR GREATER. 1X AND 2X BUCKS (WHEN USED) SHALL BE DESIGNED TO PROPERLY TRANSFER LOADS TO THE STRUCTURE. WOOD BUCK DESIGN AND INSTALLATION IS THE RESPONSIBILITY OF THE ENGINEER OR ARCHITECT OF RECORD.

4) ANCHOR EMBEDMENT TO BASE MATERIAL SHALL BE BEYOND WALL DRESSING OR STUCCO. USE ANCHORS OF SUFFICIENT LENGTH. ANCHORS AND FRAME CORNERS SHOULD BE SEALED. OVERALL SEALING/FLASHING STRATEGY FOR WATER RESISTANCE OF INSTALLATION SHALL BE DONE BY OTHERS AND IS BEYOND THE SCOPE OF THESE INSTRUCTIONS.

5) SHIMS ARE REQUIRED AT EACH ANCHOR LOCATION WHERE THE PRODUCT IS NOT FLUSH TO THE SUBSTRATE. USE SHIMS CAPABLE OF TRANSFERRING APPLIED LOADS. WOOD BUCKS, BY OTHERS, MUST BE SUFFICIENTLY ANCHORED TO RESIST LOADS IMPOSED ON THEM BY THE WINDOW.

6) THE ANCHORAGE METHODS SHOWN HAVE BEEN DESIGNED TO RESIST THE WIND LOADS CORRESPONDING TO THE REQUIRED DESIGN PRESSURE. THE 33-1/3% STRESS INCREASE HAS NOT BEEN USED IN THE DESIGN OF THIS PRODUCT. THE 1.6 LOAD DURATION FACTOR WAS USED FOR THE EVALUATION OF ANCHORS INTO WOOD. ANCHORS THAT COME INTO CONTACT WITH OTHER DISSIMILAR MATERIALS SHALL MEET THE REQUIREMENTS OF THE FLORIDA BUILDING CODE FOR CORROSION RESISTANCE.

7) FRAME FLANGES OR INTEGRAL FINS MAY BE TRIMMED IN-FIELD TO CREATE AN EQUAL-LEG FRAME.

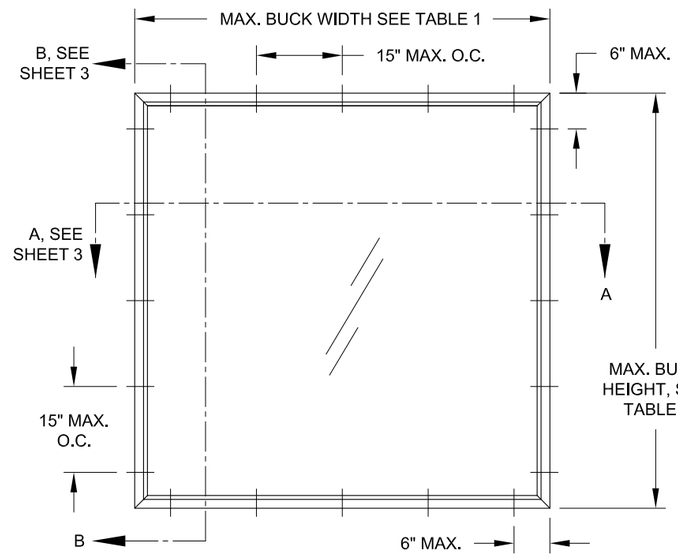

TYP. EQUAL-LEG/BOX & FLANGE FRAME (SHAPES SIMILAR)

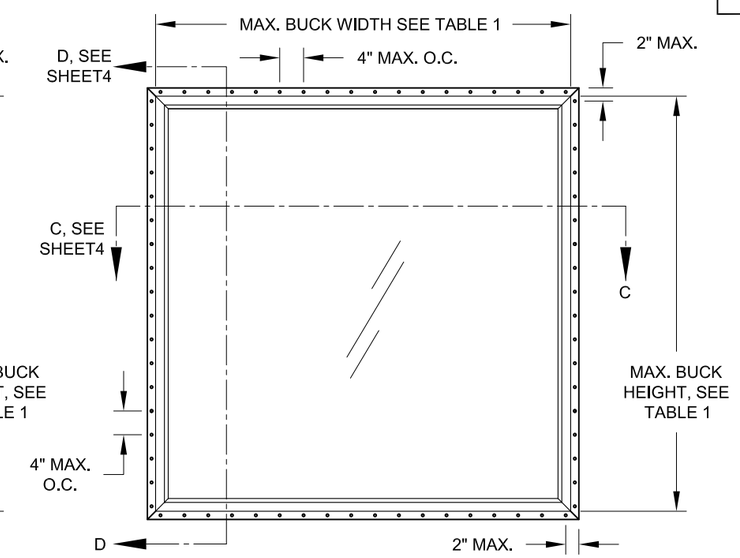

TYP. INTEGRAL FIN & J-CHANNEL FRAME (SHAPES SIMILAR)

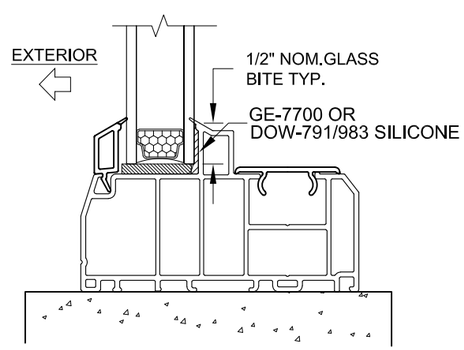

TYP. GLAZING DETAIL

SEE NEXT SHEET FOR GLASS TYPES

SHAPES MAY BE USED BY INSCRIBING THE SHAPE IN A BLOCK AND OBTAINING DESIGN PRESSURES FOR THAT BLOCK SIZE FROM THE TABLE ON THIS SHEET.

TABLE 1:

Window Buck Size		Design Pressure		Product Rating
Width	Height	(+) psf	(-) psf	
120"	60"	70.0	70.0	CW-PG70
96"	63"	50.0	50.0	CW-PG50

ALL TEMPERED AND/OR LAMINATED GLASS OPTIONS IN THIS APPROVAL HAVE BEEN CERTIFIED BY THE SGCC FOR COMPLIANCE TO ANSI Z97.1, CLASS A AND CPSC 16 CFR 1201, CATEGORY II. THIS INCLUDES LAMINATED GLASS THAT IS MANUFACTURED WITH ANNEALED GLASS PLIES. FOR APPLICATIONS WHERE THE WINDOW IS BEING USED AS A GUARD, HEAT STRENGTHENED OR TEMPERED LAMINATED GLASS MUST BE USED.

Rev.	Date	By:
TRIM FLANGE/FIN AND ANSI Z91.1 NOTES	10/4/23	LMY

PREPARED BY A. LYNN MILLER
1070 TECHNOLOGY DRIVE
N. VENICE, FL 34275
(941) 480-1600

REGISTRATION #29296

COPYRIGHT © 2023 PGT, INC., LIMITED LICENSE TO MAKE COPIES FOR PERMITTING.

PGT Custom Windows and Doors
1070 TECHNOLOGY DRIVE
N. VENICE, FL 34275
(941) 480-1600

Title	Desc.	Series	Sheet	DWG No.	Drawn By	Date	Rev.#
VINYL PICTURE WINDOW (NI)	ELEVATION & GENERAL NOTES	PW5420	1 OF 4	PW5420FPA-NI	JENS ROSOWSKI	06/12/11	E

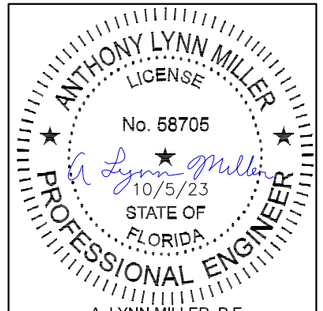

A. LYNN MILLER, P.E.
P.E.# 58705

TABLE 2: ANCHORS INSTALLED THROUGH FRAME

Anchor	Substrate	Min. Edge Distance	Min. Embedment
#10 SMS (steel, 18-8 S.S. or 410 S.S.) **Max. DP of 50.0 psf**	P.T. Southern Pine (SG=0.55)	7/16"	1-3/8"
	Steel, A36	3/8"	0.050"
	Steel Stud, A653 Gr. 33	3/8"	0.0346" (20 Ga.)
	Aluminum, 6063-T5	3/8"	0.0713" (14 Ga.)
#12 SMS (steel, 18-8 S.S. or 410 S.S.)	P.T. Southern Pine (SG=0.55)	9/16"	1-3/8"
	Steel, A36	3/8"	0.050"
	Steel Stud, A653 Gr. 33	3/8"	0.0346" (20 Ga.)
	Aluminum, 6063-T5	3/8"	0.0713" (14 Ga.)
3/16" Ultracon+ **Max. DP of 50.0 psf**	P.T. Southern Pine (SG=0.55)	7/16"	1-3/8"
	Concrete (min. 3 ksi)	1"	1-3/8"
	Ungrouted CMU, (ASTM C-90)	1"	1-1/4"
1/4" Ultracon+	P.T. Southern Pine (SG=0.55)	1"	1-3/8"
	Concrete (min. 3 ksi)	1-3/16"	1-3/4"
	Ungrouted CMU, (ASTM C-90)	1"	1-1/4"
1/4" Crete-Flex (410 S.S.)	P.T. Southern Pine (SG=0.55)	1"	1-3/8"
	Concrete (min. 3.35 ksi)	1"	1-3/4"
	Ungrouted CMU, (ASTM C-90)	2-1/2"	1-1/4"
1/4" Aggre-Gator (18-8 S.S.)	Concrete (min. 3.275 ksi)	1-1/2"	1-3/8"
	P.T. Southern Pine (SG=0.55)	1"	1-3/8"
	Ungrouted CMU, (ASTM C-90)	2"	1-1/4"

1) "UNGROUTED CMU" VALUES MAY BE USED FOR GROUTED CMU APPLICATIONS.
2) PANHEAD, FLATHEAD OR HEXHEAD ARE ACCEPTABLE.
3) ANCHOR LENGTH TO BE SO THAT A MIN. OF 3 THREADS EXTEND BEYOND THE METAL SUBSTRATE.

TABLE 3: ANCHORS INSTALLED THROUGH INTEGRAL FIN

Anchor	Substrate	Min. Edge Distance	Min. Embedment
2-1/2" x .131" Common Nail **Max. DP of 50.0**	P.T. Southern Pine (SG=.55)	9/16"	2-7/16"
2-1/2" x .131" Ring-shank Nail	P.T. Southern Pine (SG=.55)	9/16"	2-7/16"
2-1/2" x .145" Roofing Nail	P.T. Southern Pine (SG=.55)	9/16"	2-7/16"
#10 SMS (steel, 18-8 S.S. or 410 S.S.)	P.T. Southern Pine (SG=.55)	3/4"	1-3/8"
	Aluminum, 6063-T5	3/8"	0.050"
	Steel Stud, Gr. 33	3/8"	0.0346" (20 Ga.)
	Steel, A36	3/8"	0.050"

1) PANHEAD, FLATHEAD OR HEXHEAD ARE ACCEPTABLE.

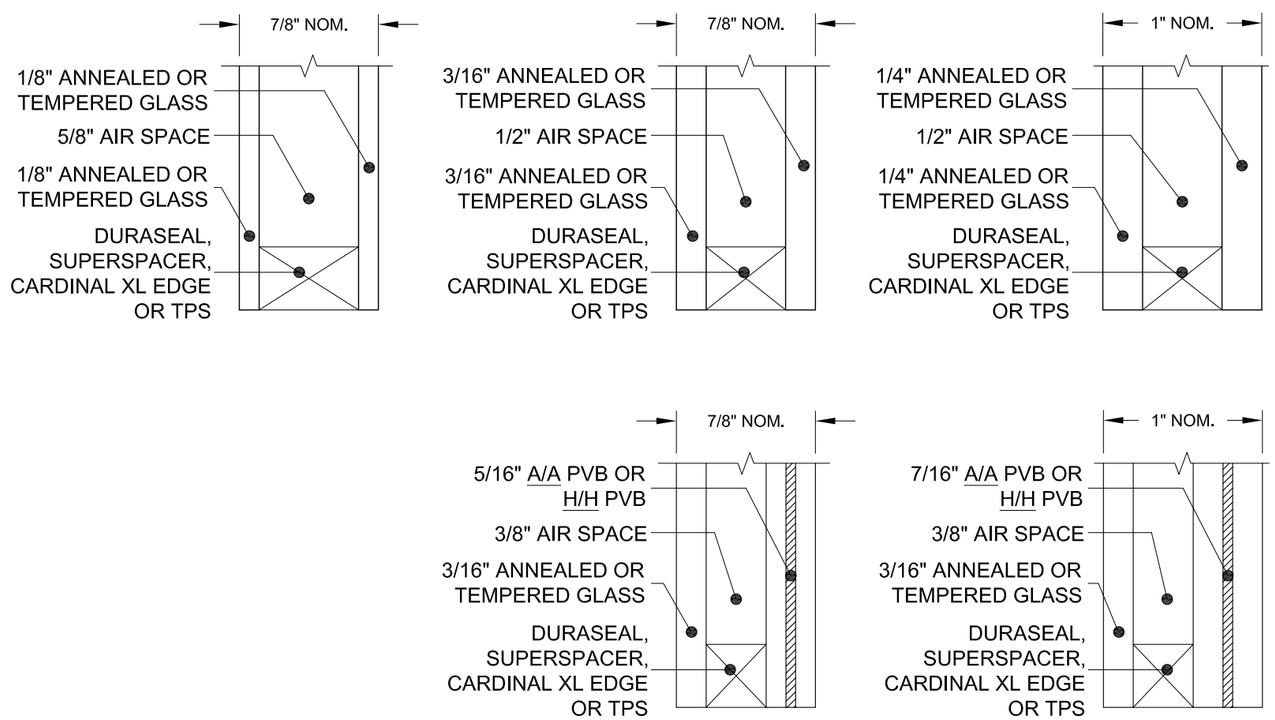

GLASS TYPES

VISIBLE LIGHT FORMULAS

WIDTH: BUCK WIDTH - 4-5/16"
HEIGHT: BUCK HEIGHT - 4-5/16"

VISIBLE LIGHT WIDTH OR HEIGHT (ALSO REFERRED TO AS DAYLIGHT OPENING) IS MEASURED FROM BEADING TO BEADING.

PVB = KURARAY TROSIFOL PVB INTERLAYER BY KURARAY AMERICA, INC.
A = ANNEALED
H = HEAT STRENGTHENED

Rev.	Date	By:
REMOVED ULTRACONS	10/4/23	LMY

PREPARED BY A. LYNN MILLER
1070 TECHNOLOGY DRIVE
N. VENICE, FL 34275
(941) 480-1600
REGISTRATION #29296

COPYRIGHT © 2023 PGT, INC., LIMITED LICENSE TO MAKE COPIES FOR PERMITTING.

PGT Custom Windows and Doors
1070 TECHNOLOGY DRIVE
N. VENICE, FL 34275
(941) 480-1600

Rev.#	Date	Drawn By	DWG No.	Sheet	Series
E	06/12/11	JENS ROSOWSKI	PW5420FPA-NI	2 OF 4	PW5420

Title: VINYL PICTURE WINDOW (NI)
Desc.: ANCHORS AND GLAZING DETAILS

ANTHONY LYNN MILLER
LICENSE
No. 58705
A Lynn Miller
10/5/23
STATE OF FLORIDA
PROFESSIONAL ENGINEER

A. LYNN MILLER, P.E.
P.E.# 58705

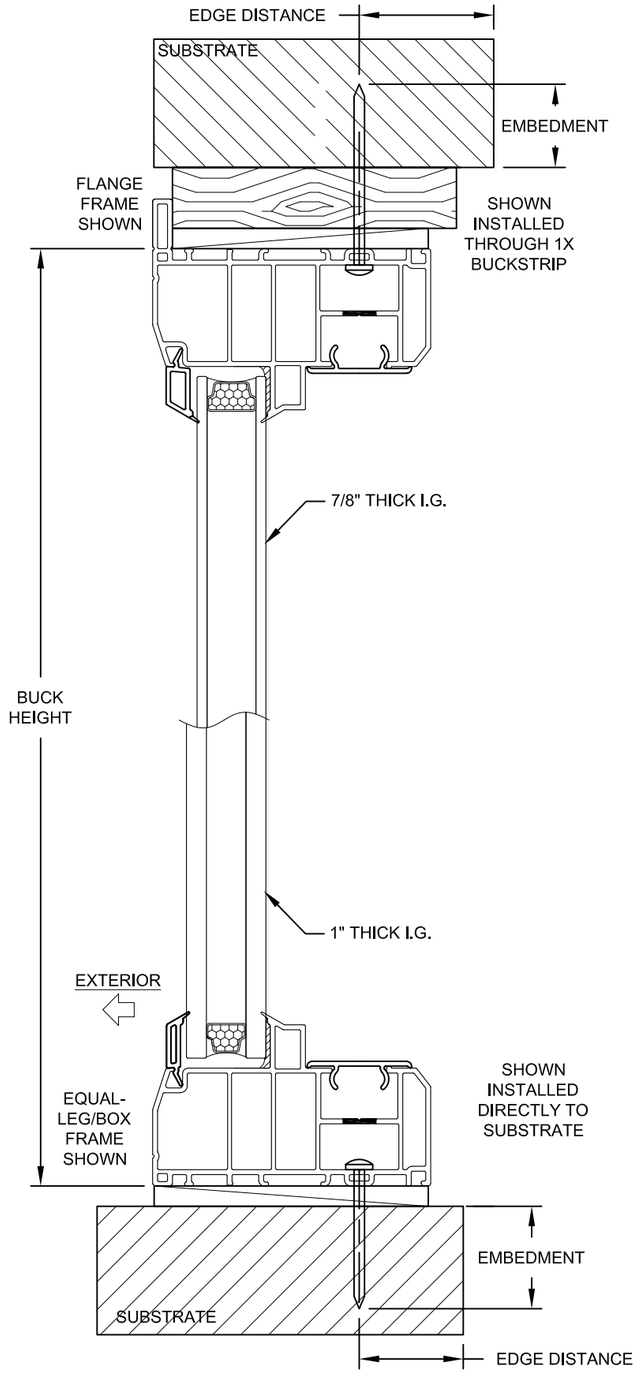

VERTICAL SECTION B-B

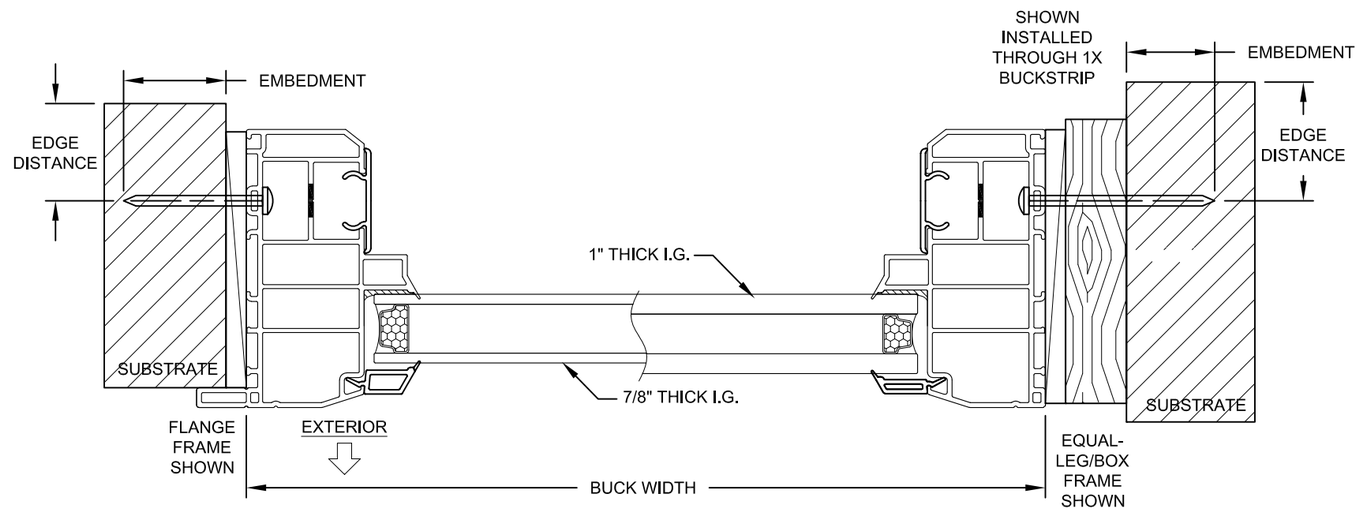

HORIZONTAL SECTION A-A

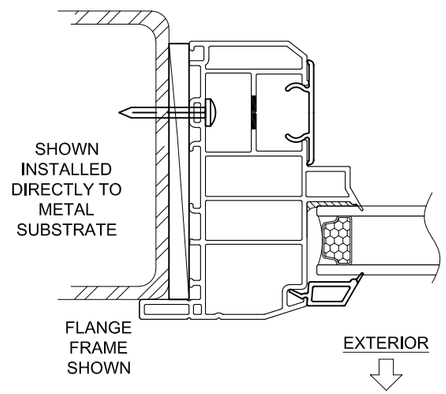

INSTALLATION NOTES:

1) SEE SHEET 1 FOR SPACING REQUIREMENTS.
2) SEE TABLE(S) ON SHEET 2 FOR ANCHORAGE AND SUBSTRATE REQUIREMENTS.
3) MAX. SHIM THICKNESS TO BE 1/4".
4) GLASS SHOWN IS FOR ILLUSTRATIVE PURPOSES ONLY AND MAY DIFFER TO MEET DESIGN REQUIREMENTS.

Rev.	Date	By:
NO CHANGES THIS SHEET	10/4/23	LMY

PREPARED BY A. LYNN MILLER
1070 TECHNOLOGY DRIVE
N. VENICE, FL 34275
(941) 480-1600

REGISTRATION #29296

COPYRIGHT © 2023 PGT, INC., LIMITED LICENSE TO MAKE COPIES FOR PERMITTING.

PGT Custom Windows and Doors
1070 TECHNOLOGY DRIVE
N. VENICE, FL 34275
(941) 480-1600

Series	Desc.	Sheet	DWG No.	Drawn By	Date	Rev.#
PW5420	FLANGE/EQUAL-LEG INSTALLATION	3 OF 4	PW5420FPA-NI	JENS ROSOWSKI	06/12/11	E

Title: VINYL PICTURE WINDOW (NI)

ANTHONY LYNN MILLER
LICENSE
No. 58705
A Lynn Miller
10/5/23
STATE OF FLORIDA
PROFESSIONAL ENGINEER

A. LYNN MILLER, P.E.
P.E.# 58705

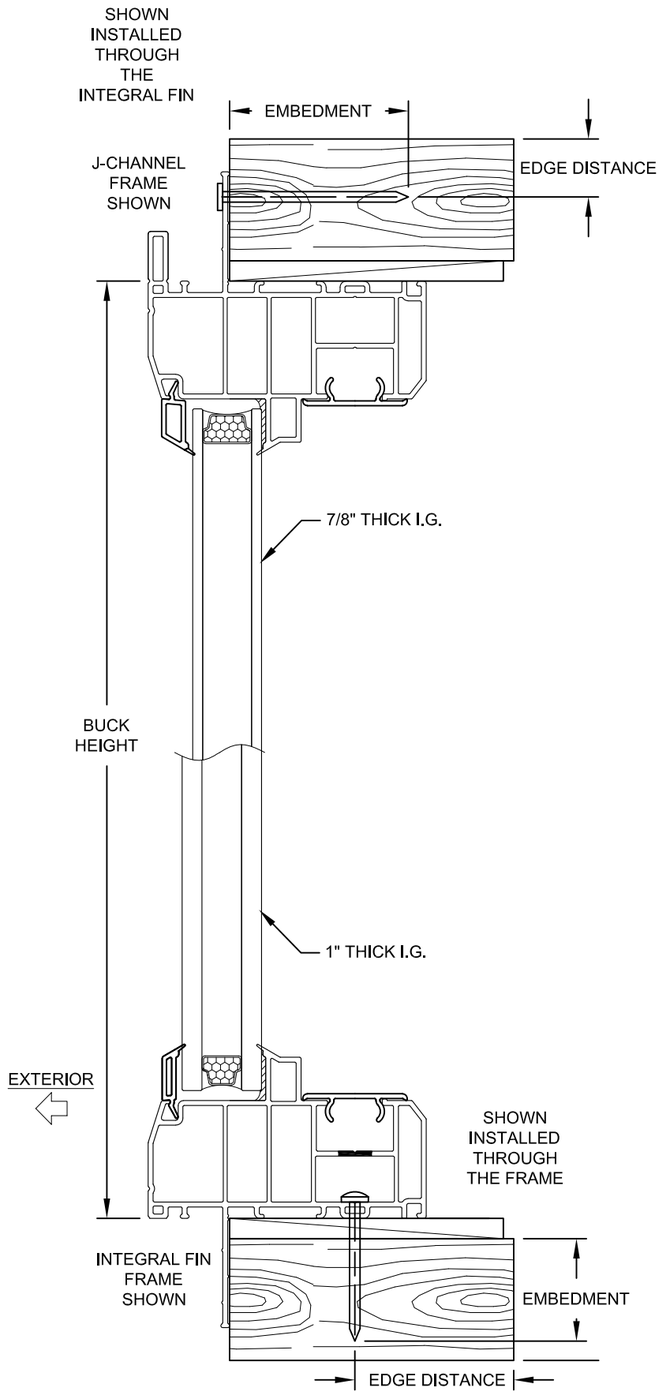

VERTICAL SECTION D-D

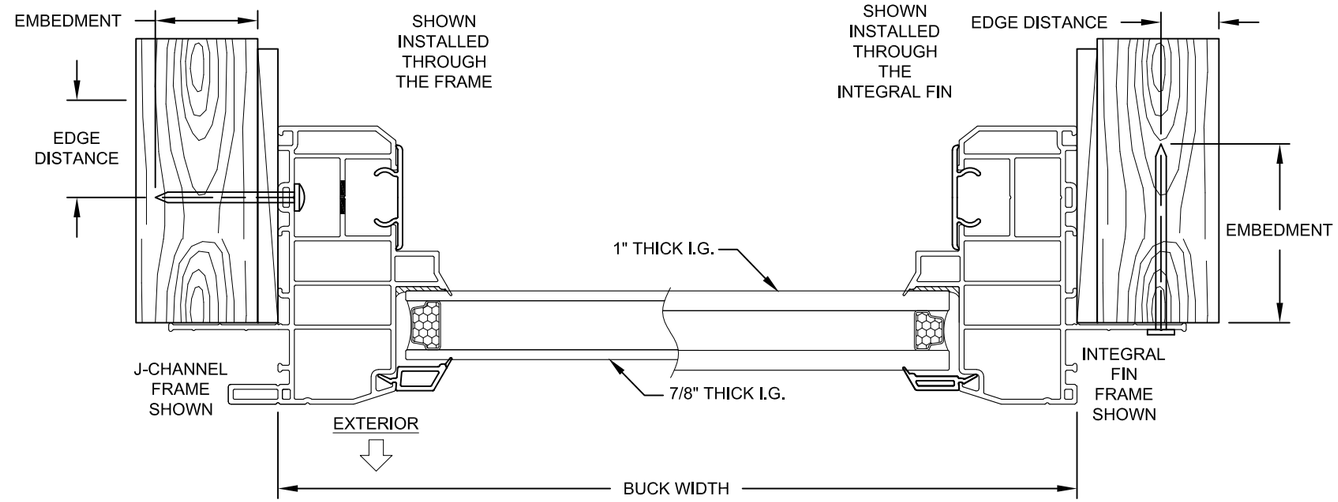

HORIZONTAL SECTION C-C

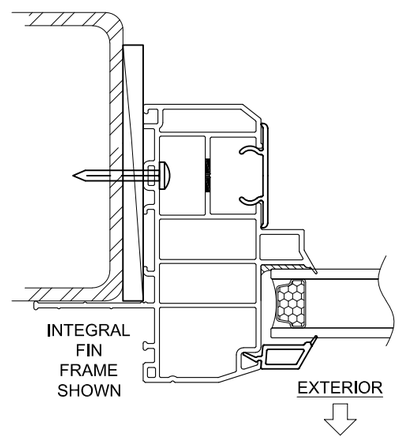

INSTALLATION THROUGH THE FRAME, INTO METAL

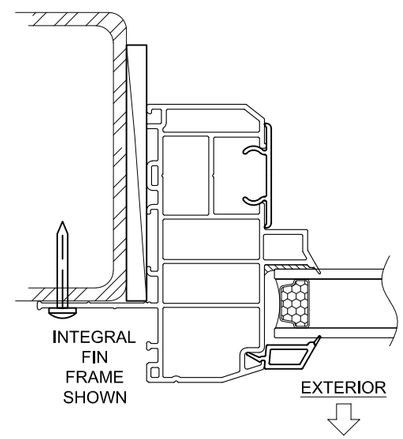

INSTALLATION THROUGH THE INTEGRAL FIN, INTO METAL

HYBRID CONFIGURATIONS (FLANGE FRAME/FIN FRAME) ALLOWED WITH MULLION INSTALLATION, SEE PAGE 3 FOR FLANGE FRAME INSTALLATION DETAILS.

INSTALLATION NOTES:

1) SEE SHEET 1 FOR SPACING REQUIREMENTS.
2) SEE TABLE(S) ON SHEET 2 FOR ANCHORAGE AND SUBSTRATE REQUIREMENTS.
3) MAX. SHIM THICKNESS TO BE 1/4".
4) GLASS SHOWN IS FOR ILLUSTRATIVE PURPOSES ONLY AND MAY DIFFER TO MEET DESIGN REQUIREMENTS.

Rev.	Date	By:
HYBRID CONFIG. NOTE	10/4/23	LMY

PREPARED BY A. LYNN MILLER
1070 TECHNOLOGY DRIVE
N. VENICE, FL 34275
(941) 480-1600

REGISTRATION #29296

COPYRIGHT © 2023 PGT, INC., LIMITED LICENSE TO MAKE COPIES FOR PERMITTING.

PGT
Custom Windows and Doors
1070 TECHNOLOGY DRIVE
N. VENICE, FL 34275
(941) 480-1600

Series	Title	Desc.	Sheet	DWG No.	Drawn By	Date	Rev.#
PW5420	VINYL PICTURE WINDOW (NI)	FIN INSATALLATION	4 OF 4	PW5420FPA-NI	JENS ROSOWSKI	06/12/11	E

ANTHONY LYNN MILLER
LICENSE
No. 58705
STATE OF FLORIDA
PROFESSIONAL ENGINEER
10/5/23

A. LYNN MILLER, P.E.
P.E.# 58705